ITALY

ELEKTRA

SINCE 1947

ITALIAN ESPRESSO COFFEE MACHINES

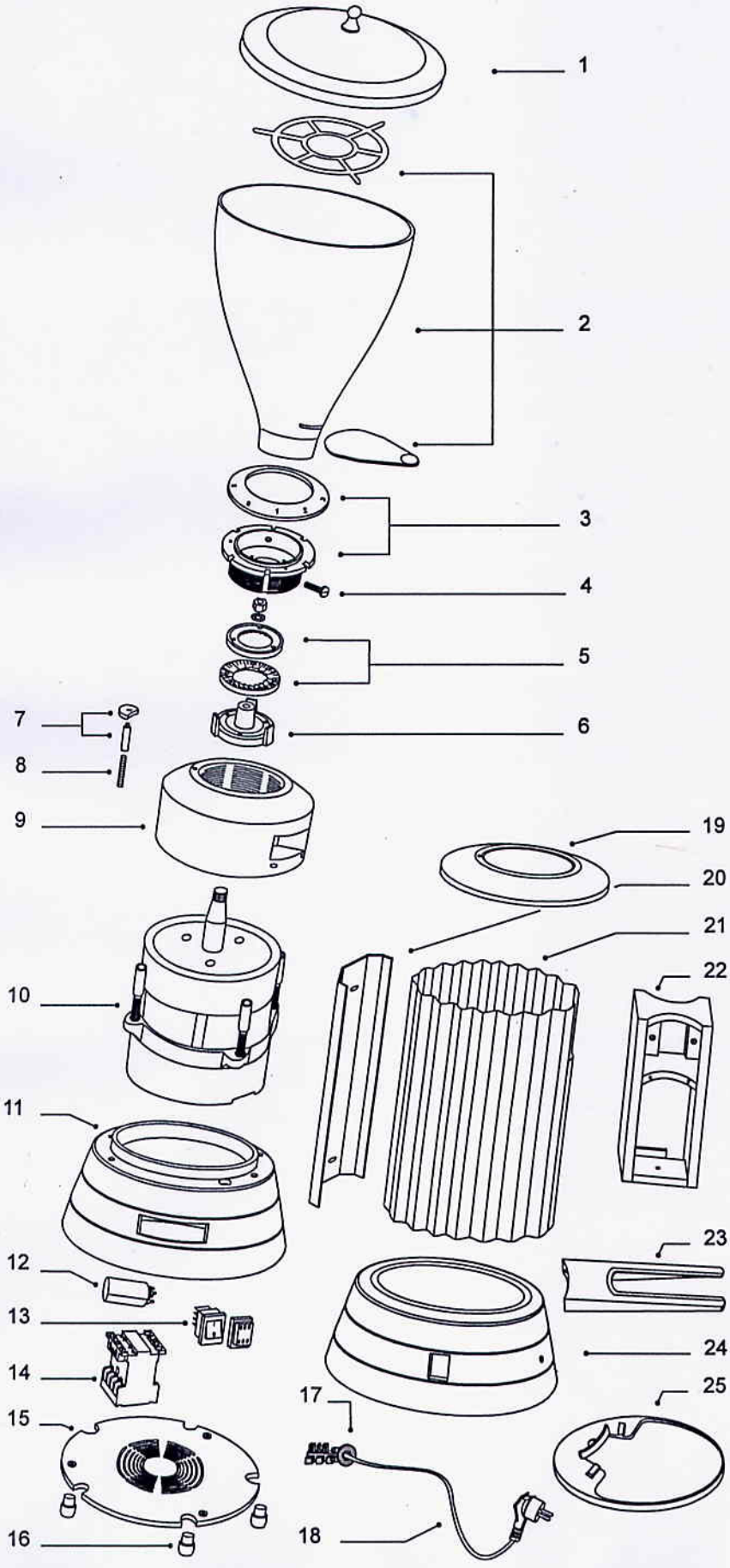

Model
MXPC - MXP

Evol.	Table	Date
1	1	19/05/2006

N.	Code	Features
1	C0004M131	
2	C0007M113	
3	C0002M110	
4	C0004M139	
5	C0004M121	
6	C0002M111	
7	C0002M102	
8	C0008M109	
9	C0001M210	
10	C00061241	230V-50Hz
	C000612411	220V-60Hz
	C000612412	110V-60Hz
11	C0001M137	
12	C00061128	230V-50/60Hz
	C00061120	110V-60Hz
13	C00061001	
14	C00061002	230V-50/60Hz
	C00061005	110V-60Hz
15	C0007M124	
16	C00071614	
17	C00061611	
18	C00061517	230V-50/60Hz
	C000615171	110V-60Hz
19	C0004M124	MXPC
	C0004M1241	MXP
20	C0004M132	MXPC
	C0004M130	MXP
21	C0004M133	MXPC
	C0004M125	MXP
22	C0001M111	MXPC
	C0001M111A	MXP
23	C0001M1141	
24	C0004M126	MXPC
	C0004M1261	MXP
25	C0007M103	

	Descriptions

ITALY
ELEKTRA
SINCE 1947
ITALIAN ESPRESSO COFFEE MACHINES

Model
MXPC - MXP

Evol.	Table	Date
2-3	2	19/05/2006

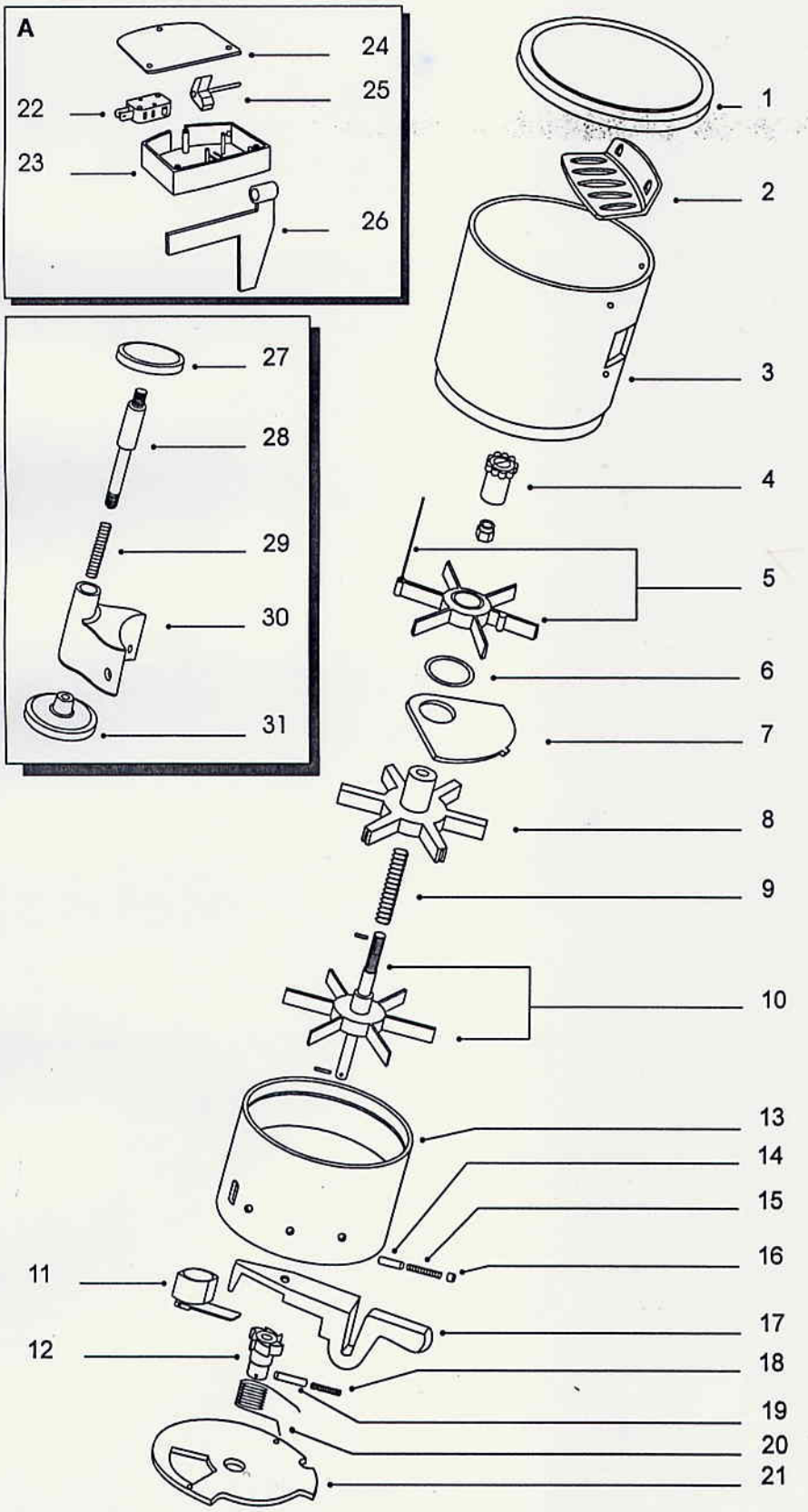

N.	Code	Features
1	C0007M105	
2	C0007M110	
3	C0007M1092	
4	C0007M123	
5	C0002M124	
6	C0004M110	
7	C0004M108	
8	C0002M1241	
9	C0008M108	
10	C0002M1242	
11	C0009M102	
12	C0002M106	
13	C0001M104	MXPC
	C0001M104C82	MXP
14	C0004M112	
15	C0008M107	
16	C0001M138	
17	C0002M103	
18	C0008M110	
19	C0004M111	
20	C0008M102	
21	C0007M138	
22	C00061019	
23	C0007M148	
24	C0007M147	
25	C0002M132	
26	C0007M150	
27	C0007M135A	
28	C0004M127	
29	C0008M111	
30	C0007M134	
31	C0001M332	
A	C0007M139A	

	Descriptions